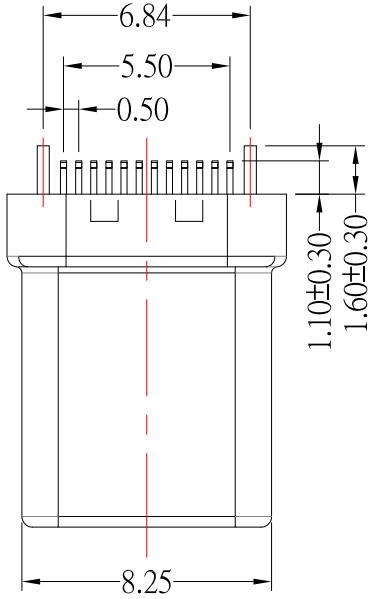

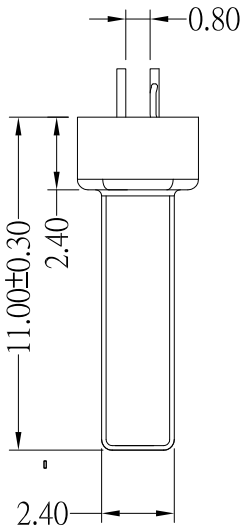

A1	GND	B12	GND
A2	SSTXP1	B11	SSRXP1
A3	SSTXN1	B10	SSRXN1
A4	VBUS	B9	VBUS
A5	CC1	B8	SBU2
A6	DP1	B7	DN2
A7	DN1	B6	DP2
A8	SBU1	B5	CC2
A9	VBUS	B4	VBUS
A10	SSRXN2	B3	SSTXN2
A11	SSRXP2	B2	SSTXP2
A12	GND	B1	GND
PIN	SIGNAL NAMF	PIN	SIGNAL NAMF

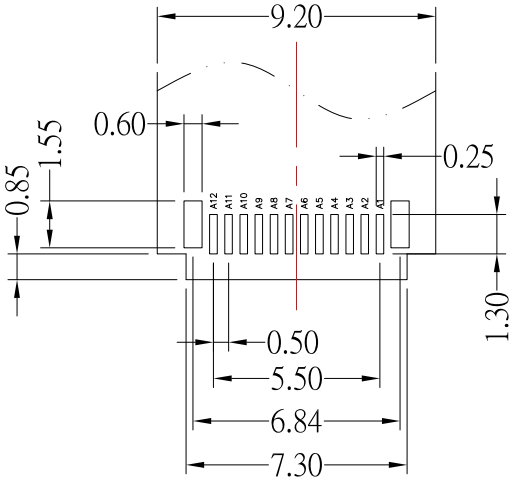

PCB LATOUT

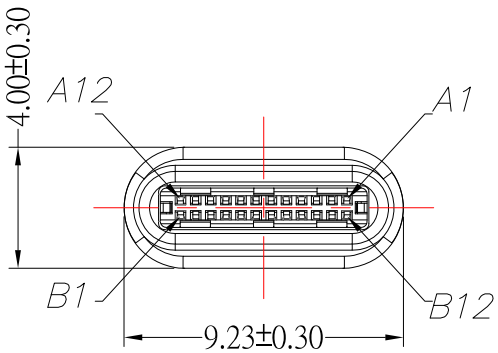

SBC-241PL26-31x-S271

鍍層厚度 :

Blank : 1u"
2 : 15u"
3 : 30u"

SPECIFICATIONS

Electrical:

1.Current Rating: 3.0A

2.Contact Resistance: 40 mΩ Max

3.Dielectric Withstanding Voltage: 100 V AC

5.Insulation Resistance: 100 MΩ Min

Material:

1.Housing:LCP

2.Contact: C7025

3.Shell: SUS

Finish:

1.Contact: Plated Gold in Mating Area ;
Tin Plated on Solder Balls ;
Nickel under plated overall

2.Shell: Nickel under Plated surface layer

ITEM NO.	DESCRIPTION	DRAWN	DATE
4	更新圖面	Jack	121522
3	更新Contact材質	Jack	111822
2	更新尺寸	Jack	060820
1	更新PCB LAYOUT	Jack	123019

東莞市高迪電子有限公司
DONG GUAN GAO DI ELECTRONICS CO., LTD

TOLERANCE UNLESS OTHERWISE STATED : Up to 5 ±0.2; Above 5 ~ 15 ±0.3; Above 15 ~ 30 ±0.4; Above 30 ~ 50 ±0.5; Angle ±0.3°

3RD. ANGEL'S | UNITS MM

DRAWN BY: Jack Lu	DATE 12/15/22	MAT'L	
CHECKED BY: Jacky Chen	DATE 12/15/22	FINISH	
APPROVED BY: Tony Kao	DATE 12/15/22	SCALE 1 : 1	SHEET NO. 1 of 1

TITLE	CONNECTOR		
MODLE	TYPE C 公頭不帶板 拉伸款		
DWG NO.	SBC-241PL26-31x-S271	SIZE	A4
PART NO.	SBC-241PL26-31x-S271	VER	R4