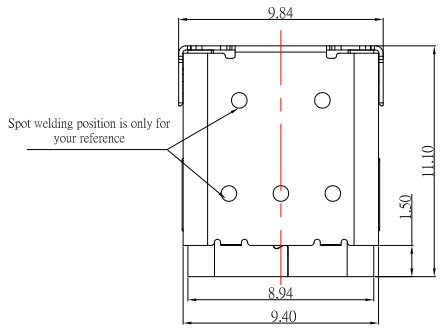

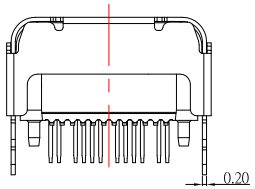

SBC-240S19-31x-S165

鍍層厚度 :

Blank : 1u"
2 : 15u"
3 : 30u"

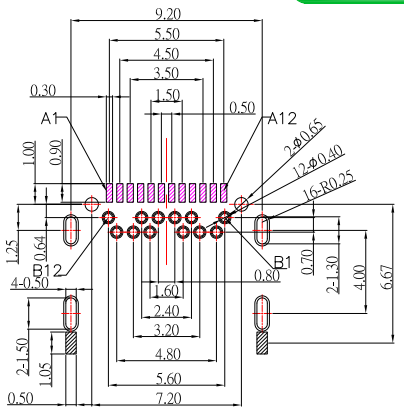

P.C.B LAYOUT MOUNTING PATTERN

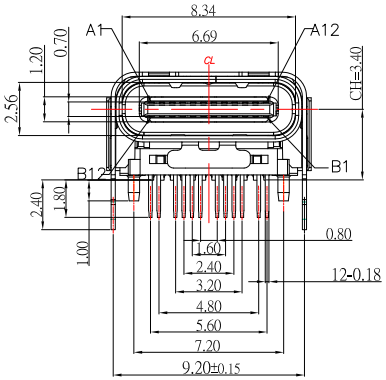

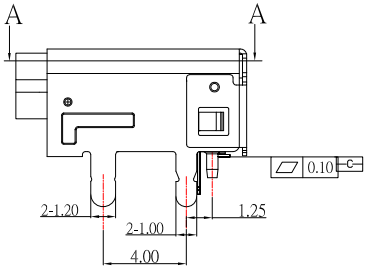

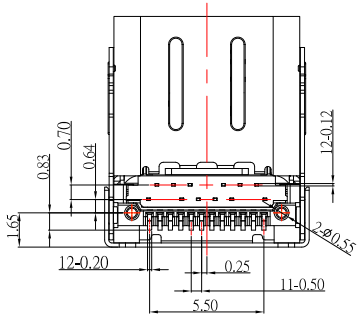

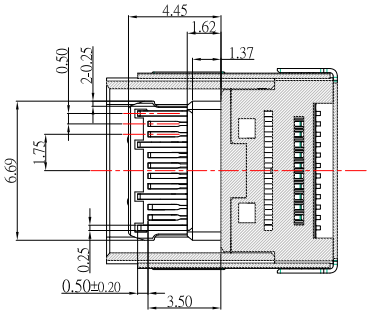

SECTION A-A

Pin No	Signal Name	Mating Sequence	Pin No	Signal Name	Mating Sequence
A1	GND	First	B12	GND	First
A2	TX1+	Second	B11	RX1+	Second
A3	TX1−	Second	B10	RX1−	Second
A4	VBUS	First	B9	VBUS	First
A5	CC1	Second	B8	SBU2	Second
A6	D+	Second	B7	D−	Second
A7	D−	Second	B6	D+	Second
A8	SBU1	Second	B5	CC2	Second
A9	VBUS	First	B4	VBUS	First
A10	RX2−	Second	B3	TX2−	Second
A11	RX2+	Second	B2	TX2+	Second
A12	GND	First	B1	GND	First
SHELL		GND	SHELL		GND

SPECIFICATIONS

Electrical:

1.Rating: 5.0V AC , 3.0A

2.Contact Resistance: 40 mΩ Max

3.Insulation Resistance: 100 MΩ Min

4.Dielectric Withstanding Voltage: 100V AC

Mechanical:

1.Connector Mate and Unmate Force

1.1 Mate force: 5~20 N

1.2 Unmate force: 8~20 N

Material:

1.Housing: LCP

2.Contact: C7025

3.Shell: SUS

Finish:

1.Contact: Plated Gold in Mating Area ;

Tin Plated on Solder Balls ;

Nickel under plated overall

2.Shell: Nickel under Plated surface layer

ITEM NO.	DESCRIPTION	DRAWN	DATE
2	更新圖面	Jack	120123
1	更新MODEL描述	Jack	120522

東莞市高迪電子有限公司
DONG GUAN GAO DI ELECTRONICS CO., LTD

TOLERANCE UNLESS OTHERWISE STATED : Up to 5 ±0.2; Above 5 ~ 15 ±0.3; Above 15 ~ 30 ±0.4; Above 30 ~ 50 ±0.5; Angle ±0.3°

3RD. ANGEL'S | UNITS | MM

DRAWN BY: Jack Lu	DATE 12/01/23	MAT'L	
CHECKED BY: Jacky Chen	DATE 12/01/23	FINISH	
APPROVED BY: Tony Kao	DATE 12/01/23	SCALE 1 : 1	SHEET NO. 1 of 1

TITLE	CONNECTOR
MODLE	TYPE C/F 加高型 CH:3.4 SMT+ DIP 腳 L:11.1
DWG NO.	SBC-240S19-31x-S165
PART NO.	SBC-240S19-31x-S165
SIZE	A4
VER	R2