Halgen Free Compliant

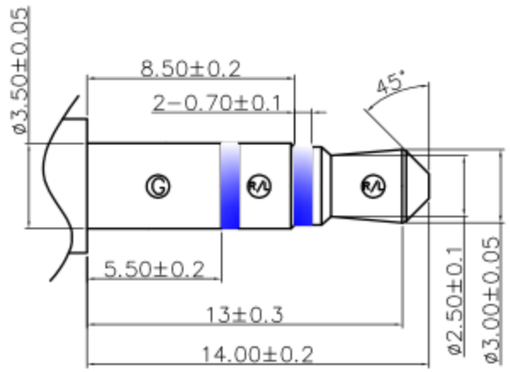

Matching Plug

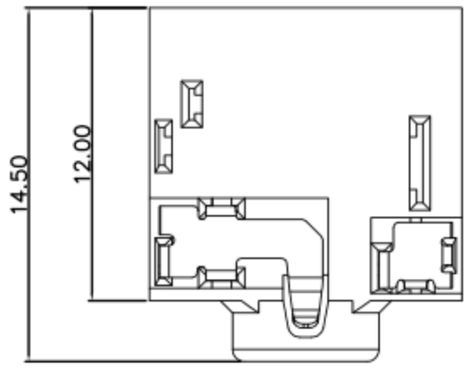

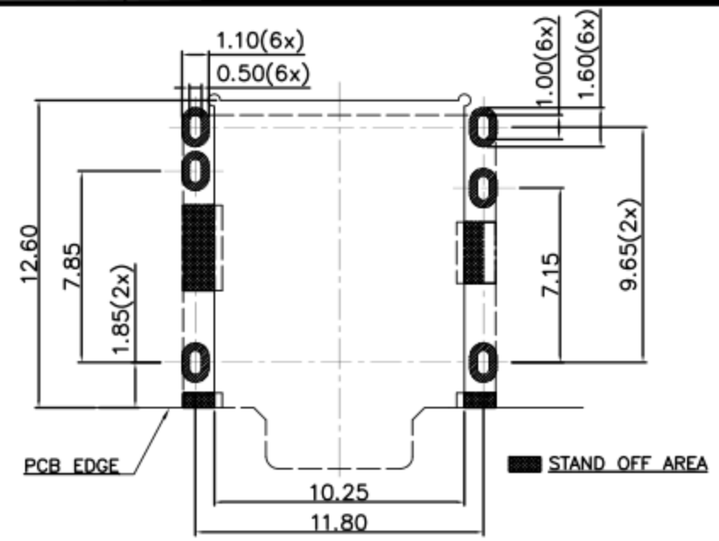

RECOMMENDED P.C.B LAYOUT T=1.20
TOP VIEW (TOLRANCE:±0.05)

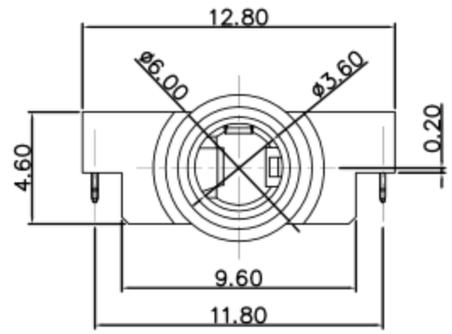

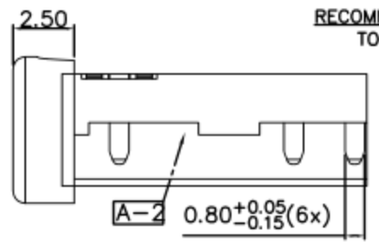

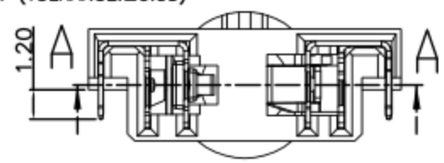

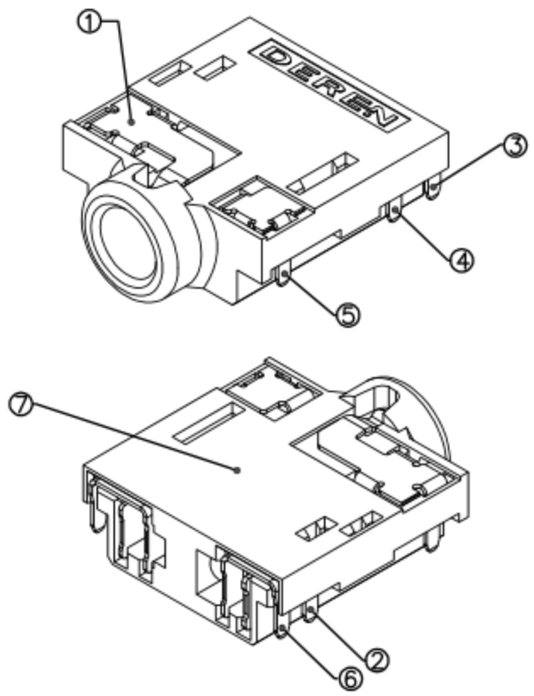

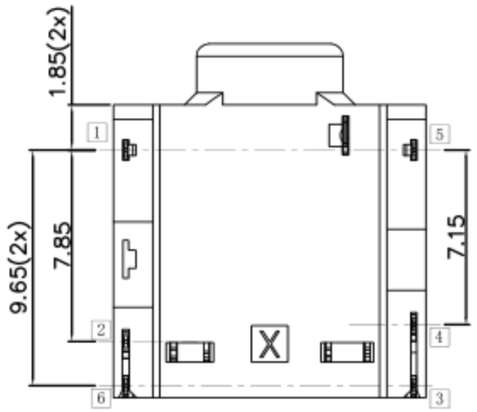

SPECIFICATION:

1.Electrical Characteristics
- 1-1.Voltage Rating: DC 30V;
- 1-2: Current Rating: DC 0.3A Max.;
- 1-3: Contact Resistance: 30mΩ Max.;
- 1-4.Insulation Resistance: 100MΩ Min. At 500V DC;
- 1-5.Withstanding Voltage: 500V AC For 1 Minute;

2.Mechanical Characteristics
- 2-1.Life Test: 5000 Cycles Min,
- 2-2.Mating/Unmating Force: 3~30N;

3.Salt Spray Test Time: 48 Hours Min.

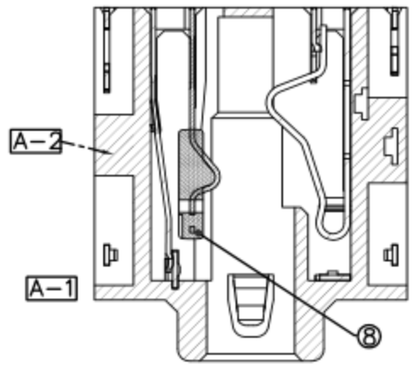

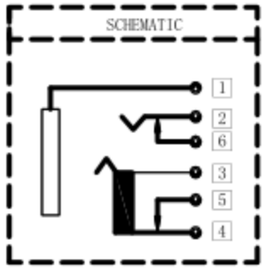

NO.	DESCRIPTION		QTY	MATERIAL	REMARK
⑧	Insulator			HIGHT TEMPERATURE PLASTIC	Black,UL94 V-0
⑦	Housing			HIGHT TEMPERATURE PLASTIC	Black,UL94 V-0
⑥	Shunt terminal	6	1	Phosphor Bronze,t0.20	Gold Flash Plated
⑤	Shunt terminal	5	1	Phosphor Bronze,t0.20	Gold Flash On The Contact Area, Matte-TIN Plating 80u"Min. on Solder Tail Area Nickel 50u"Min. Under Plating All Over
④	Transfer Spring	4	1	Phosphor Bronze,t0.20	
③	Ring Spring	3	1	Phosphor Bronze,t0.20	
②	Tip Spring	2	1	Phosphor Bronze,t0.25	
①	Earth Spring	1	1	Phosphor Bronze,t0.20	

ECN NO.	REV	DATE	DESCRIPTION	CHANGE	APPRO.	GENERAL TOLERANCE UNLESS OTHERWISE NOTED	
						Angle	±2°
	A-2	17'/03/08	A-2:减少两槽位深度,外观会随之修改	Andy	李海鸥	10<L≤20	±0.3
	A-1	14'/03/17	A-1:设计变更MOLDING塑胶结构及锡脚公差;	喻荣华	余 军	5<L≤10	±0.25
	A-0	13'/05/05	NEW	喻荣华	余 军	L≤5	±0.20

DESIGN	Andy	2017/03/08	
CHECK			
APPROVAL			
SCALE: 1:1	UNIT: mm	A4	SHEET: 1 of 1

东莞市高迪电子有限公司

TITLE:	ø3.50mm Phone Jack(6PIN,CL=0.20mm)
MODEL NO.	PJR-D32290-ABK7AM02L-RH
FILE NO.	/

原始设计: 喻荣华 承认: 余 军 日期: 2013.05.05 (此栏不随版次变更)