RoHS Compliant

ZONE	SYMBOL	REVISION	APPROVAL	DATE
A		INITIAL	Lucky	06/20/20'

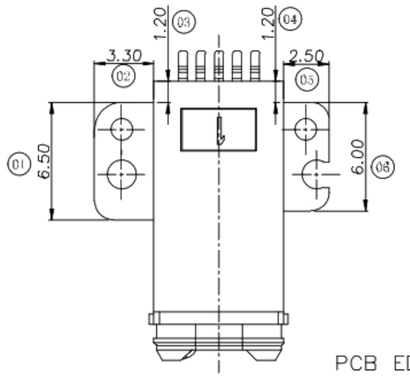

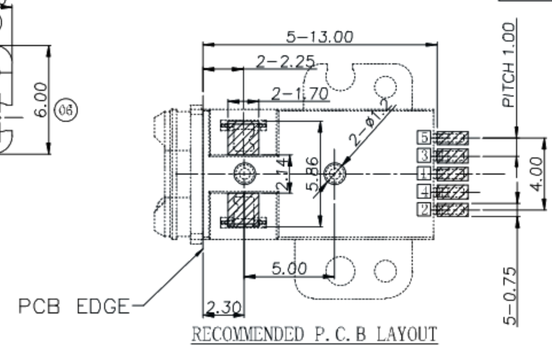

RECOMMENDED P.C.B LAYOUT
TOP VIEW (TOLRANCE: ±0.05)

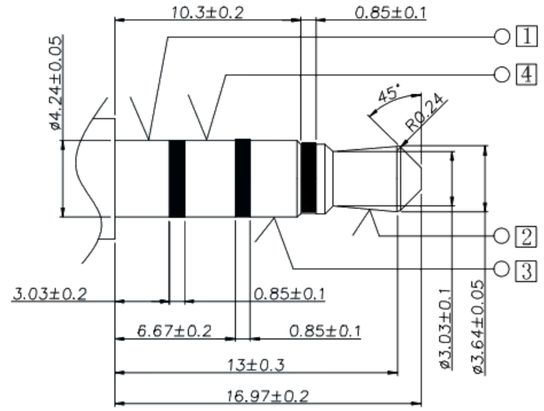

Matching Plug

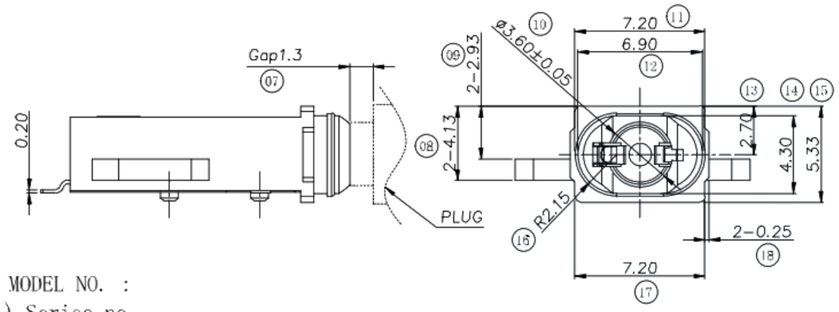

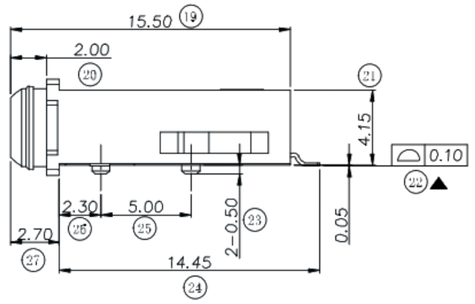

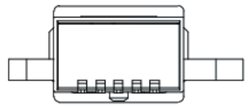

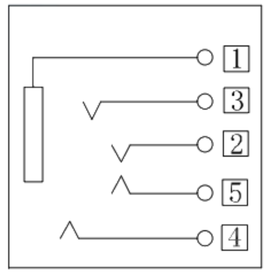

Circuit Diagram

MODEL NO. :
(1) Series no.
(2) Schematic type: A
(3) Housing color:
BK7=Black.
(4) Terminal plating:
AU03= Au 3u"/Gold flash.
(5) Packing mode:
L=Reel packing.
(6) Environmental requirements:
RH=RoHS 2.0 + Halogen Free.
RS=RoHS 2.0.

SPECIFICATION:
1. Electrical characteristics
1-1. Current rating:DC 0.5A max.
1-2:Voltage rating:DC 30V.
1-3:Contact resistance:50mΩ max
1-4. Insulation resistance:1000MΩ min. at 500V DC.
1-5. Withstanding voltage:500V AC for 1 minute.
2. Mechanical characteristics
2-1. Life test:5000 cycles min,
2-2. Mating force:3~30N,
Unmating force:3~30N.
3. Temperature range: -40° C~+80° C
4. Dustproof and waterproof grade: IP67.

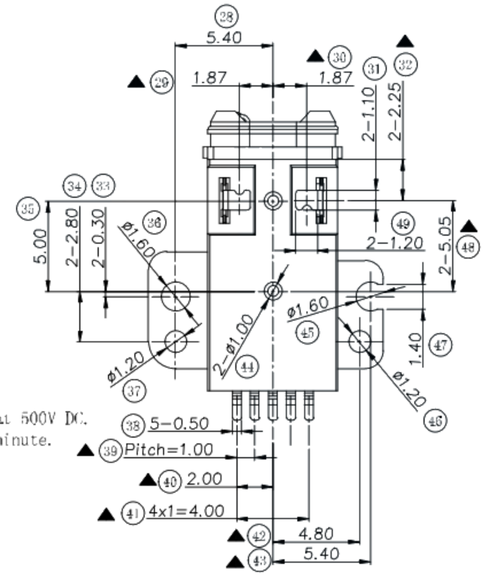

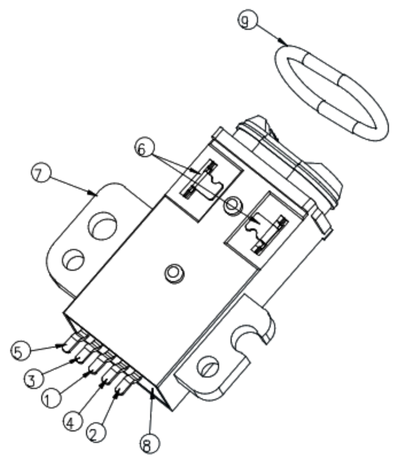

3D VIEW

NO.	DESCRIPTION	QTY	MATERIAL	REMARK
9	Rubber ring	1	Silica Gel	White
8	cover	1	HIGH TEMPERATURE PLASTIC	Black
7	Housing	1	HIGH TEMPERATURE PLASTIC	Black
6	Shunt	2	Phosphor bronze, 0.15t	3u"Au on Contact Area And Gold Flash On Other Area.
5	Tip spring 5	1	Phosphor bronze, 0.20t	
4	Ring spring 4	1	Phosphor bronze, 0.20t	
3	Ring spring 3	1	Phosphor bronze, 0.20t	
2	Tip spring 2	1	Phosphor bronze, 0.20t	
1	Earth spring 1	1	Phosphor bronze, 0.20t	

东莞市高迪电子有限公司

DRAWING:	Lucky	DATE:	2020.20.06	SCALE	5:1
CHECK:	liao Y K	DATE:	2020.20.06	MATERIAL	*
APPROVAL:	Abel	DATE:	2020.20.06	DWG. no.	A
DRAWING NO.				SHEET	1/1

PART NAME	3.5mm STEREO JACK	TOLERANCE UNLESS OTHERWISE SPECIFIED:	0.0±0.2 0.00±0.1 0.000±0.05	UNIT: mm
PART NO.				