RoHS Compliant

ZONE	SYMBOL	REVISION	APPROVAL	DATE
A		INITIAL	Lucky	06/20/20'

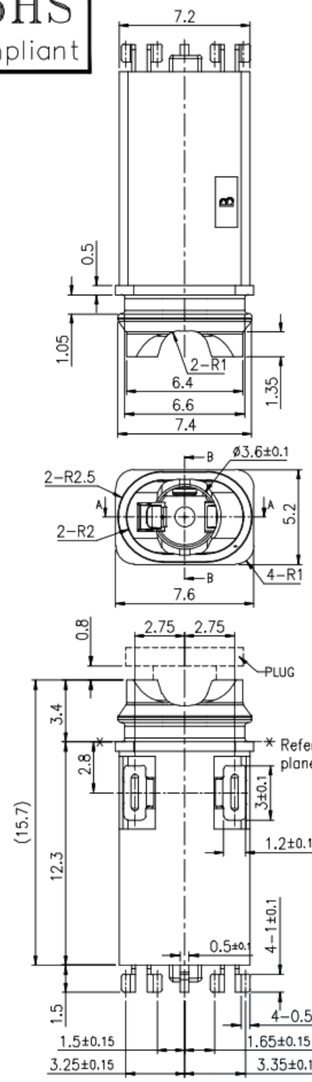

Bottom view

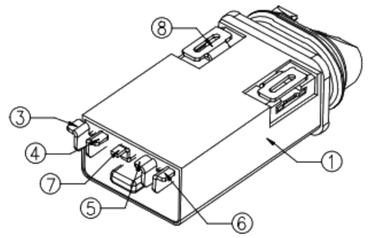

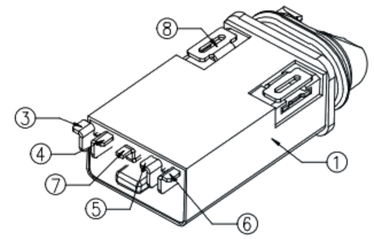

3D VIEW

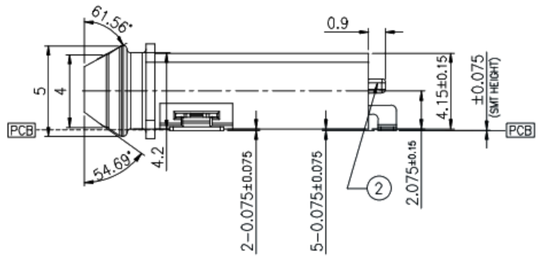

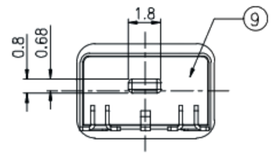

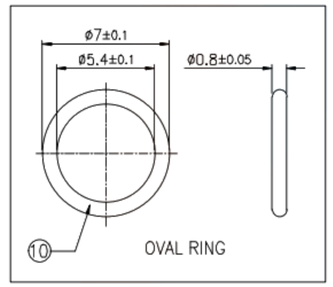

SPECIFIATIONS:
1.INSULATION RESISTANCE:A VOLTAGE OF 500V D.C. SHALL BE APPLIED TO THE TERMINALS, AFTER WHICH MEASUREMENT SHALL BE MADE. A GAUGE FOR THE MEASUREMENT SHALL BE USED THE INSULATEDGAUGE.
2.CONTACT RESISTANCE:30mΩ OR LESS
3.VOLTAGE PROOF:500V AC FOR ONE MINUTE
4.DURABILITY: 10,000 INSERTION/REMOVAL CYCLES(MINIMUM)
5.INSETION FORCE:0.4KGF~2.0KGF
6.WITHDRAWAL FORCE:0.4KGF~2.0KGF
7.WATER PROOFNESS: THIS PRODUCT IS CONFORM TO JIS STANDARD IPX7 BY WATERPROOF JACK
8.USING PLUG: Φ3.5MM、4-POLE STEREO EARPHONE(LCH/RCH/GND/MIC) PROVIDED THAT THEY CONFORM TO JIS C6560
9.OVAL RING
9-1.Hardness of silicone rubber: 70°
9-2.Horizontal flash 0.10mm max;Longitudinal flash 0.10mm max

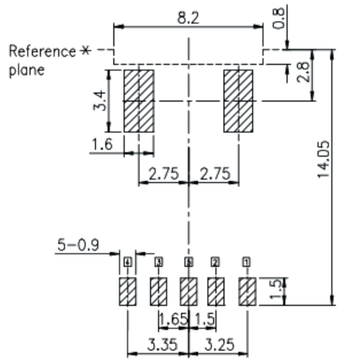

Recommended PCB Layout
Tolerance: ±0.1(Top view)

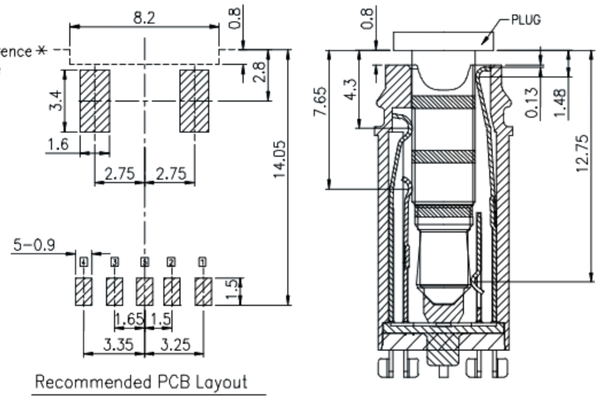

SEC:A-A
Image of plug match with contact point

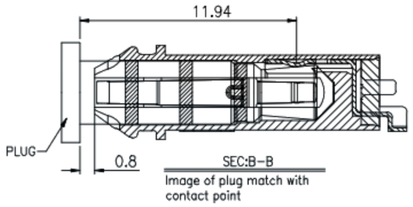

SEC:B-B
Image of plug match with contact point

SCHEMATIC	AFTER PLUG IN
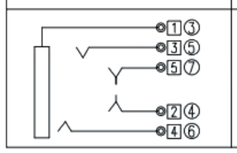	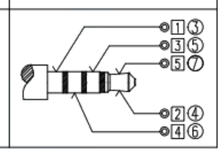

□ : TERMINAL NO. ○ : ITEM NO.

ITEM	PART NAME	TERMINAL	QTY	MATERIAL	REMARK
⑩	OVAL RING	----	1	SILICONE	BLUE
⑨	BOND	----	1	----	----
⑧	TERMINAL	----	2	C2680 t=0.2	1st:Ni(1μm or more),2nd:Sn(MIN 2 μm or more)PLATED
⑦	TIP SPRING-2	5	1	Ti-Cu t=0.2	1st:Ni(1μm or more),2nd:Au(MIN 0.03 μm or more)PLATED
⑥	RING SPRING-2	4	1	Ti-Cu t=0.2	1st:Ni(1μm or more),2nd:Au(MIN 0.03 μm or more)PLATED
⑤	RING SPRING-1	3	1	Ti-Cu t=0.2	1st:Ni(1μm or more),2nd:Au(MIN 0.03 μm or more)PLATED
④	TIP SPRING-1	2	1	Ti-Cu t=0.2	1st:Ni(1μm or more),2nd:Au(MIN 0.03 μm or more)PLATED
③	EARTH SPRING	1	1	Ti-Cu t=0.2	1st:Ni(1μm or more),2nd:Au(MIN 0.03 μm or more)PLATED
②	COVER	----	1	PA9T(BLACK)	UL 94V-0
①	HOUSING	----	1	PA9T(BLACK)	UL 94V-0

东莞市高迪电子有限公司

DRAWING:	Lucky	DATE:	2020. 20. 06	SCALE	5:1
CHECK:	liao Y K	DATE:	2020. 20. 06	MATERIAL	*
APPROVAL:	Abel	DATE:	2020. 20. 06	DWG. no.	A
DRAWING NO.				SHEET	1/1

PART NAME	3. 5MM STEREO JACK	TOLERANCE UNLESS OTHERWISE SPECIFIED:	0.0±0.2 0.00±0.1 0.000±0.05
PART NO.			

UNIT: mm