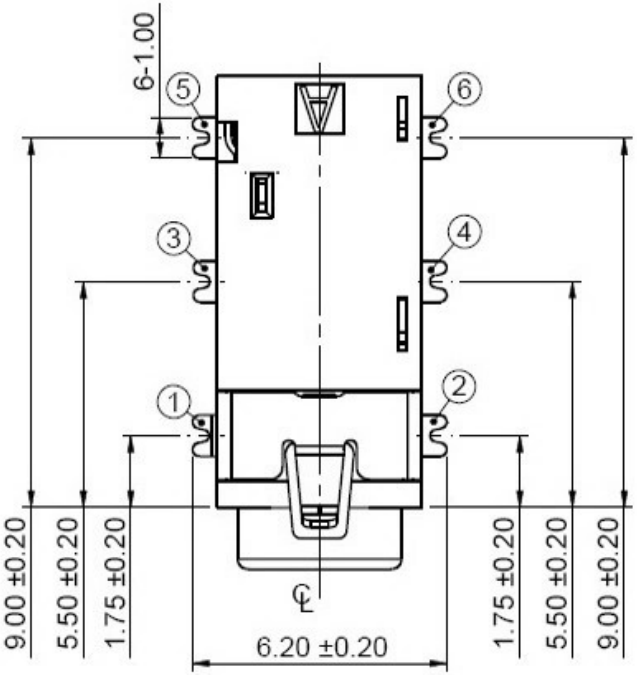

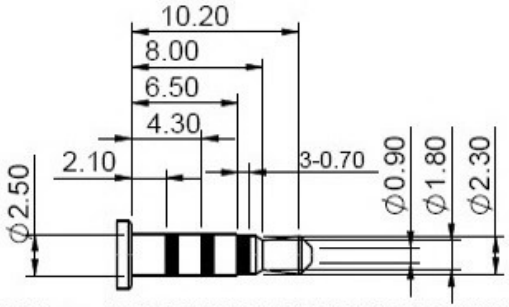

(Ø2.50mm 4 POLE PLUG DETAIL DRAWING)

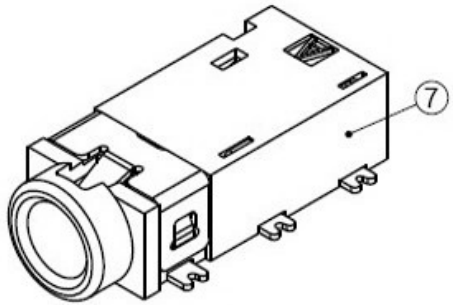

RECOMMENDED PCB LAYOUT(TOP VIEW)
(GENERAL TOLERANCE ±0.05)

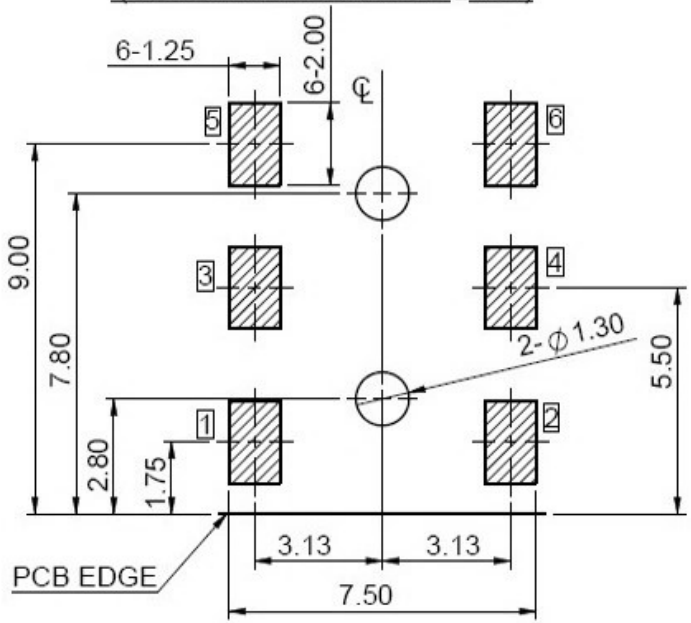

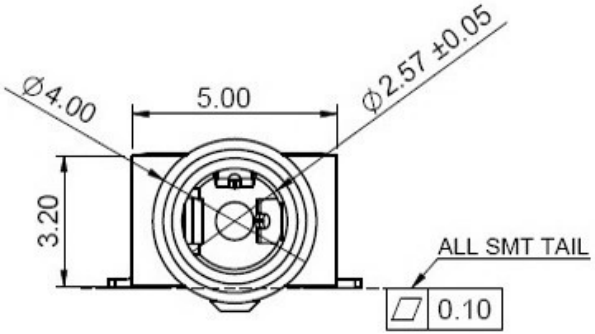

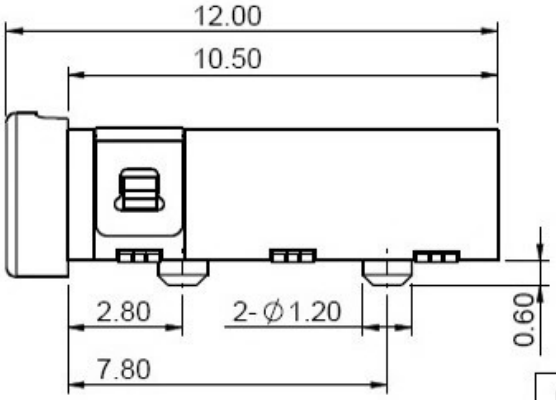

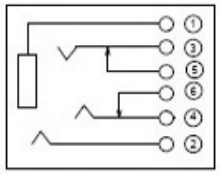

SCHEMATIC

NOTES:
1.CONTACT CURRENT RATING: 1A.
2. CONTACT RESISTANCE: 50 mΩ MAX.;
3. INSULATION RESISTANCE: 100MΩ MIN.;
4. DIELECTRIC WITHSTANDING: 500V AC MIN.;
5. DURABILITY: 5,000 CYCLES MIN.;
6. CONNECTOR MATING FORCES:
29.4N (3.00Kgf) MAX.;
7. CONNECTOR UNMATING FORCES:
2.94N(0.30Kgf) MIN.;

NO.	DESCRIPTION	MAT,L	COLOR	REMARK
7	HOUSING	HIGH TEMP	BLACK	———
6	TERMINAL6	COPPER ALLOY	———	Au PLATED
5	TERMINAL5	COPPER ALLOY	———	Au PLATED
4	TERMINAL4	COPPER ALLOY	———	Au PLATED
3	TERMINAL3	COPPER ALLOY	———	Au PLATED
2	TERMINAL2	COPPER ALLOY	———	Au PLATED
1	TERMINAL1	COPPER ALLOY	———	Au PLATED

高迪电子有限公司

CUSTOMER COPY

TITLE: Ø2.50mm PHONE JACK CONN.

PART NO.

PRODUCT SPEC.

DRAWING FILE NAME.

ECN NO.	REV	DATE	DESCRIPTION	CHANGE	APPRO.
	C	10/19/'12	C1:图面规范化	彭志况	罗志兵
	B	08/25/'12	B1:图面重新整理发行	彭志况	罗志兵

GENERAL TOLERANCE UNLESS OTHERWISE NOTED	
Angle	±2°
X	±0.35
.X	±0.25
.XX	±0.20

DESIGN	彭志况	10/19/'12
CHECK	谭艳斌	10/19/'12
APPRO.	罗志兵	10/19/'12

SCALE 5:1 | UNIT:mm | A4 | SHEET: 1 of 2