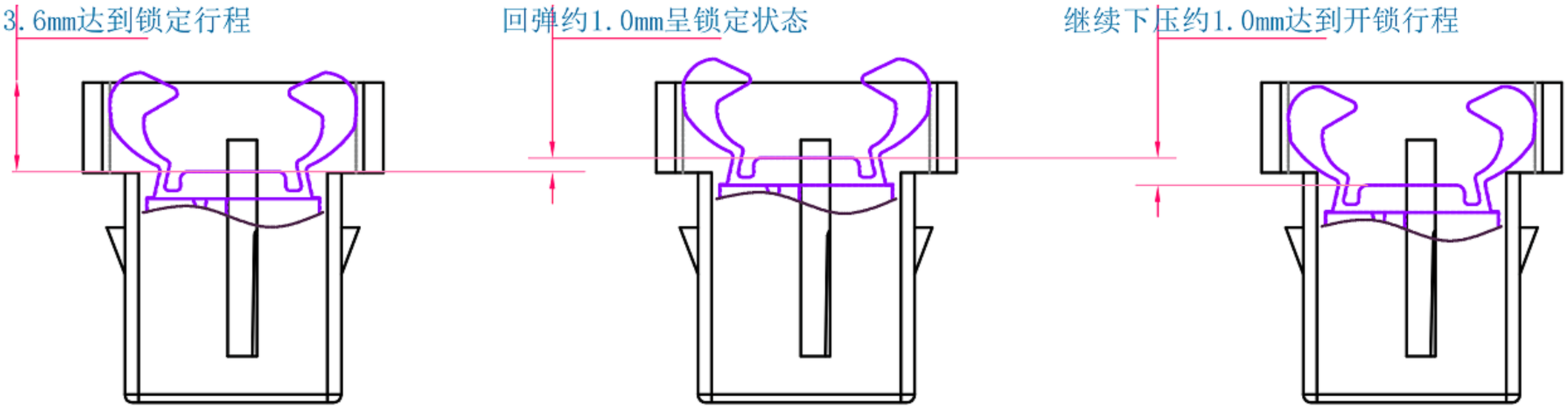


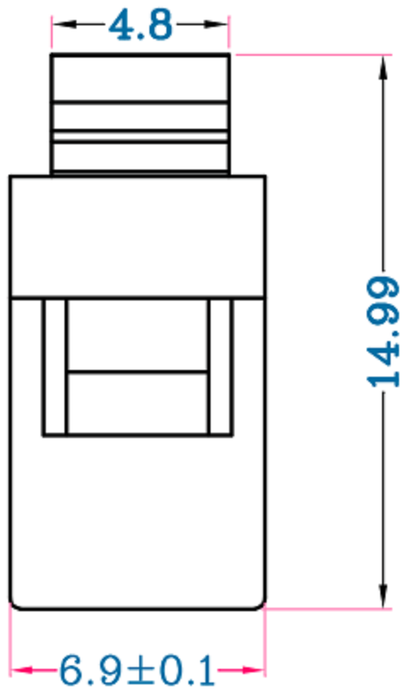


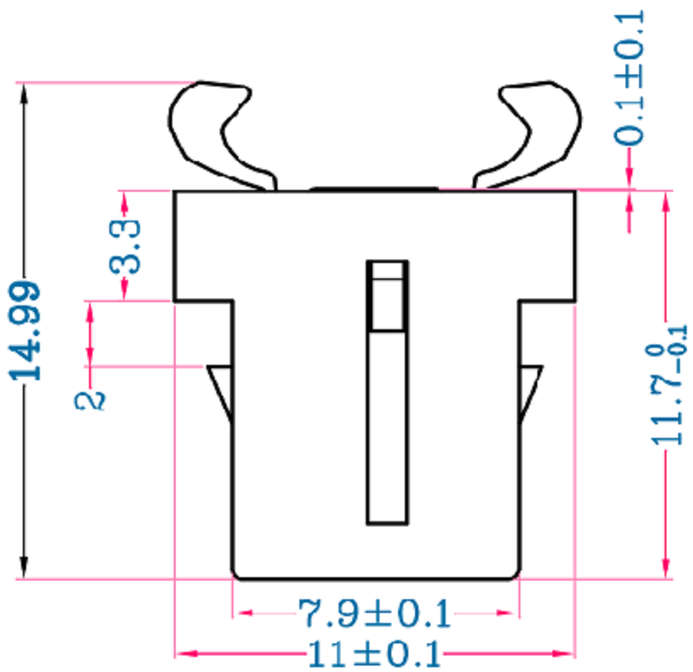

| | | | |
|---|---|---|---|
| TITLE | DOOR LATCH SWITCH | DRAWN | |
| PART NO. | Lock switch | CHECKED | |
| DRAW NO. | | APPROVED | |
| SCALE: 2:1 | UNIT: mm | DATE: | |

| TOLERANCE OTHERWISE UNLESS SPECIFIED | |
|---|---|
| UP TO 5 | ±0.2 |
| ABOVE 5 ~ 30 | ±0.3 |
| ABOVE 30 ~ 50 | ±0.4 |
| ABOVE 50 | ±0.5 |
| ANGLE | ±3° |

| NO. | PARTS | MATERIAL | QTY. | FINISHING |
|---|---|---|---|---|
| 8 | | | | |
| 7 | | | | |
| 6 | | | | |
| 5 | | | | |
| 4 | | | | |
| 3 | SPRING | SUS | 1 | Ni PLATED |
| 2 | HOUSING | POM | 1 | BLACK |
| 1 | SLIDER | PA12 | 1 | BLACK |

東莞市高迪電子有限公司

DONG GUAN GAODI ELECTRONICS CO., LTD.